MADE IN EU

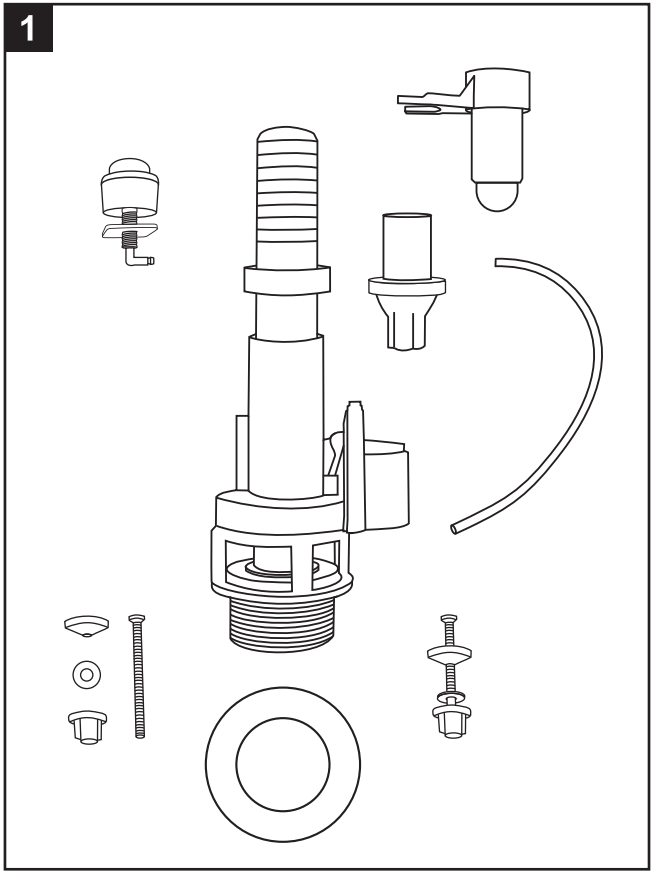

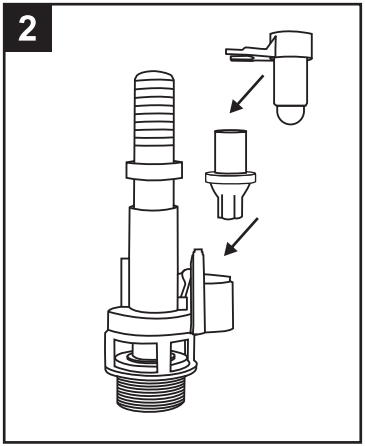

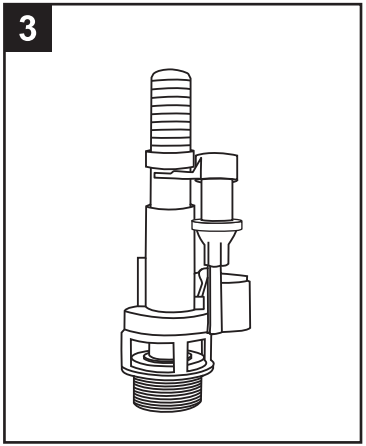

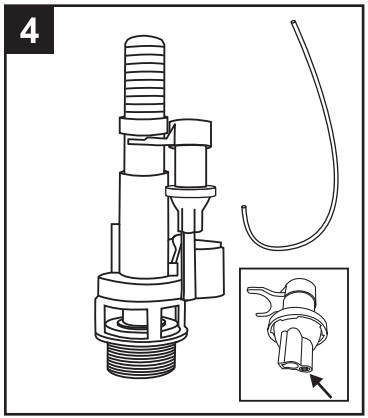

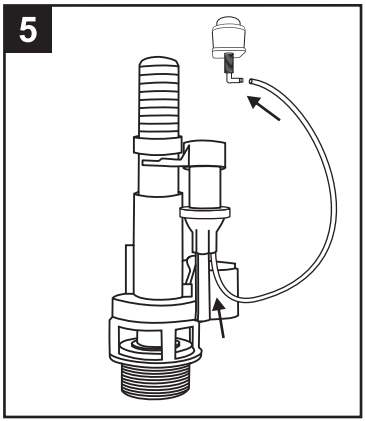

PUBBL008

6

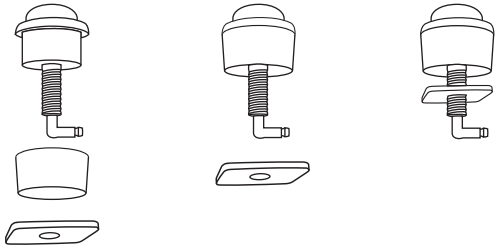

7

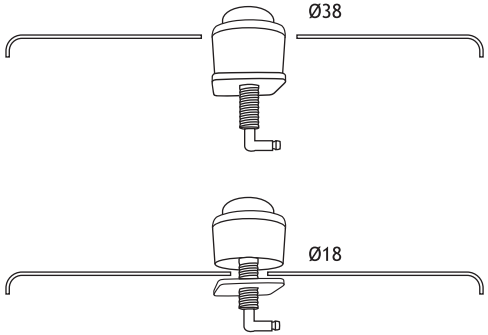

8

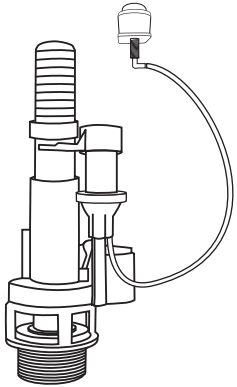

9

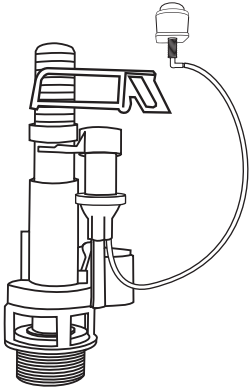
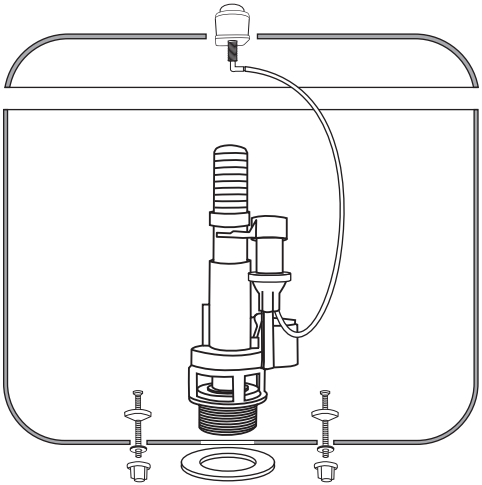
10